2020 DOE OE ENERGY STORAGE PROGRAM REVIEW

GAN ENABLED EFFICIENT PLUG-AND-PLAY BATTERY ENERGY STORAGE SYSTEM

STUDENTS: TIANXIANG CHEN & PENGKUN LIU
POSTDOC: DR. RUIYANG YU
PI: DR. ALEX Q. HUANG
Semiconductor Power Electronics Center (SPEC)
The University of Texas at Austin

Outline

1. Motivation and Project Objective

2. Proposed Approach and Innovation

3. Accomplishment

4. Future Project Plan

Better and Lower Cost Battery Energy Storage System

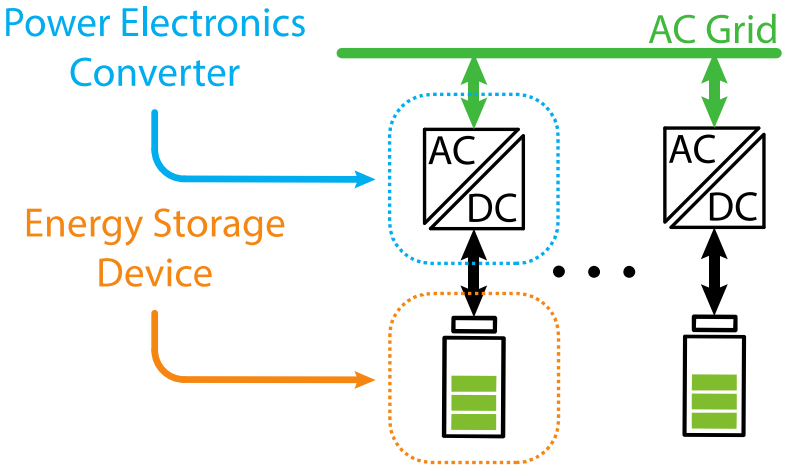

Battery Energy Storage

- Li-ion
- Flow battery
- Zn-MnO2

Low Voltage?

High voltage battery pack, high BMS/BOS cost

Low voltage battery pack, lower BMS/BOS cost
Better SOC utilization

[1] M. T. Lawder *et al.*, "Battery Energy Storage System (BESS) and Battery Management System (BMS) for Grid-Scale Applications," in *Proceedings of the IEEE*, vol. 102, no. 6, pp. 1014-1030, June 2014.

Motivation

Lower voltage battery pack system (12V or 48 V or 400V)

Pros:

- Much safer
- higher battery SOC utilization
- low DC voltage wiring

Cons:

- High DC current
- More requirement on power electronics
- Difficult for converter to achieve high efficiency

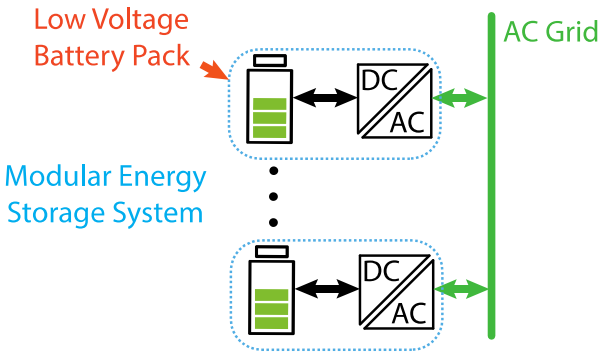

670A Current for 10kW at 12V, high requirement for power electronics, wiring cost and difficulty

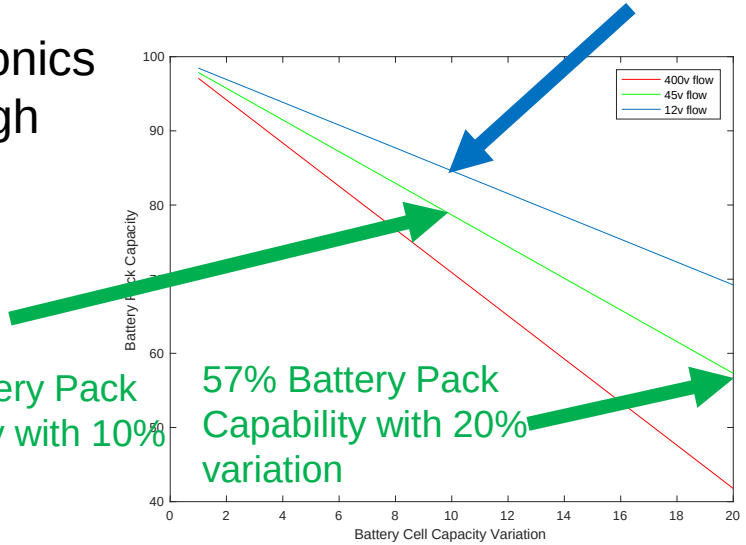

80% Battery Pack Capability with 10% variation

57% Battery Pack Capability with 20% variation

Project Objective

Specifications	
Rated grid voltage	480V / 208V Three Phase
Rated power	10kW
Rated battery voltage range	48 V / 32 - 52 V
Battery types	Flow battery/ZnMnO2/Li-ion

Power Electronics Challenges

- DC/AC conversion
- High step up voltage ratio
- Bidirectional power flow
- High efficiency

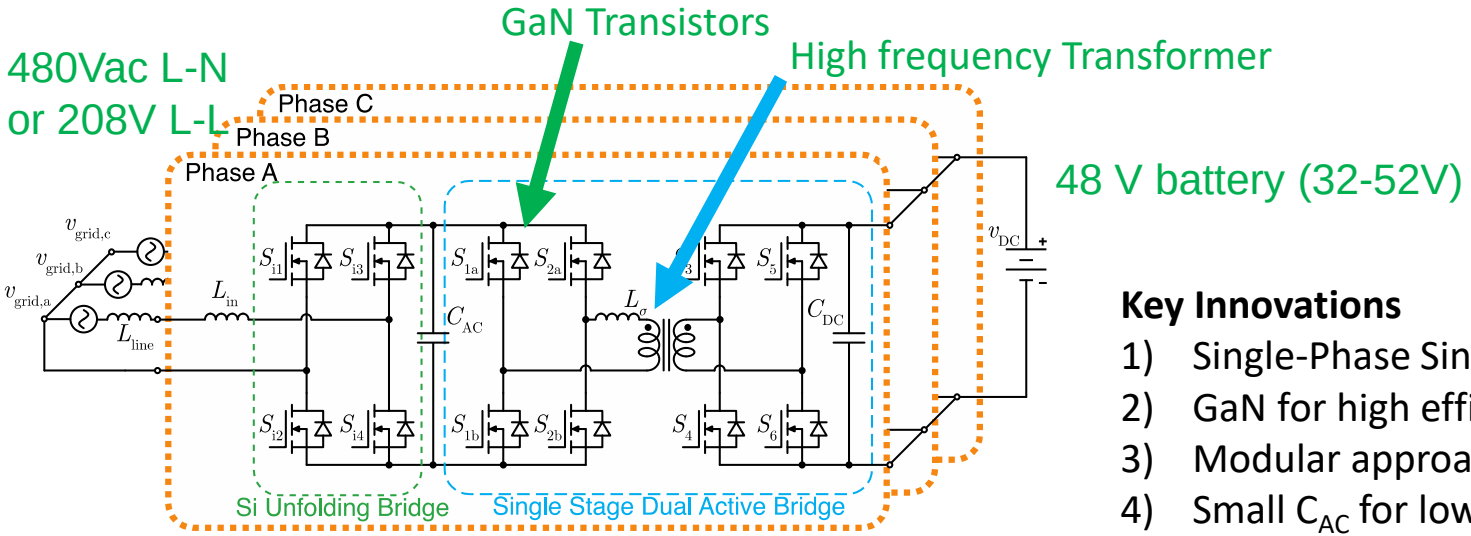

3-Phase Single-Stage AC/DC Bidirectional Converter

Key Innovations

1) Single-Phase Single-Stage DC/AC
2) GaN for high efficiency and density
3) Modular approach to support scaling
4) Small C_{AC} for low AC side inrush current
   - Enable Plug-and-play

Accomplishments: PE Advancement

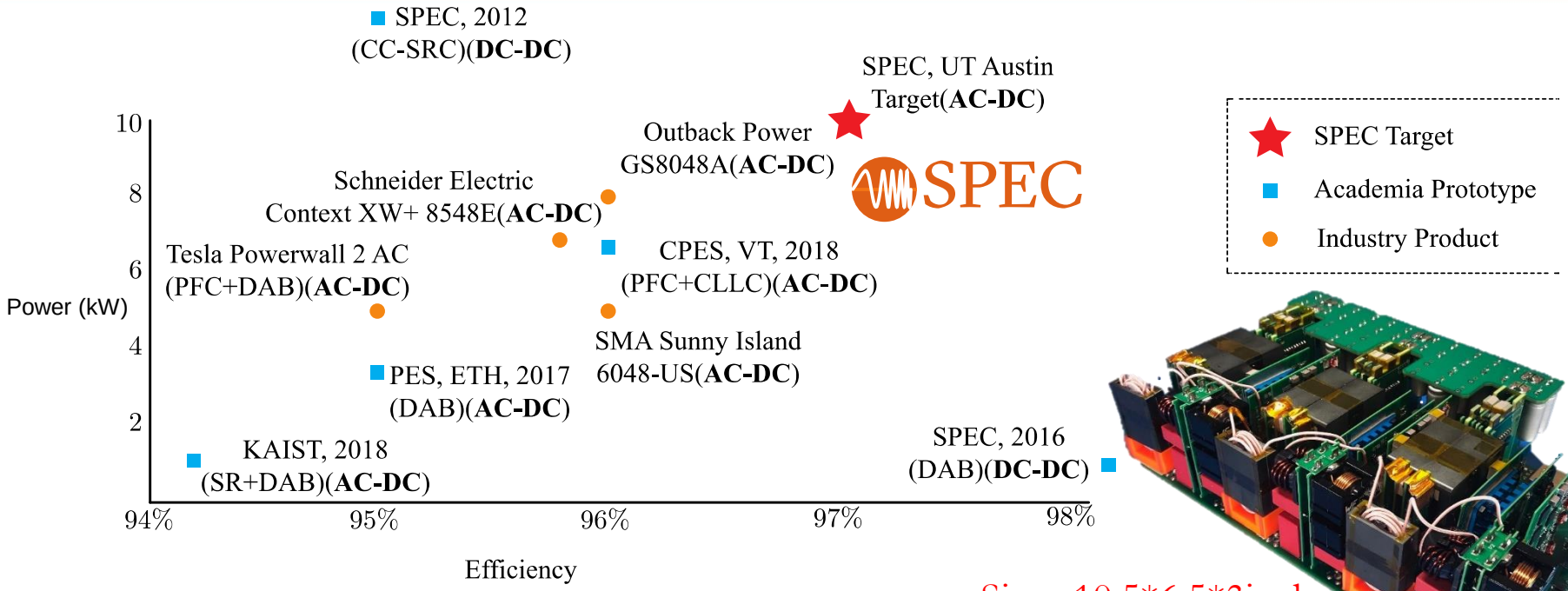

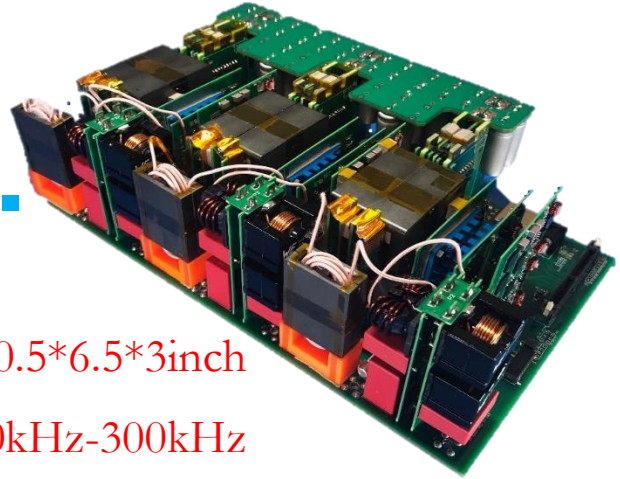

Size=10.5*6.5*3inch

fsw=50kHz-300kHz

Peak efficiency=97%

[1] http://files.sma.de/dl/15216/SIGEN-11FD1212.pdf
[2] http://www.outbackpower.com/downloads/documents/inverter_chargers/radian_8048a_4048a/radianseries_8048a_4048a_specsheet.pdf
[3] https://41j5tc3akbrn3uezx5av0jj1bgm-wpengine.netdna-ssl.com/wp-content/uploads/2017/09/DS20170928_Conext-XW-230V-Datasheet.pdf
[4] B. Li, Q. Li and F. C. Lee, "A WBG based three phase 12.5 kW 500 kHz CLLC resonant converter with integrated PCB winding transformer," 2018 IEEE Applied Power Electronics Conference and Exposition (APEC), San Antonio, TX, 2018, pp. 469-475.
[5] J. Everts, "Closed-Form Solution for Efficient ZVS Modulation of DAB Converters," in IEEE Transactions on Power Electronics, vol. 32, no. 10, pp. 7561-7576, Oct. 2017.
[6] O. Kwon, J. Kim, J. Kwon and B. Kwon, "Bidirectional Grid-Connected Single-Power-Conversion Converter With Low-Input Battery Voltage," in IEEE Transactions on Industrial Electronics, vol. 65, no. 4, pp. 3136-3144, April 2018.

Accomplishments: Efficiency Optimization

Power Electronics Challenge: Universal Input , Wide Battery Voltage Range

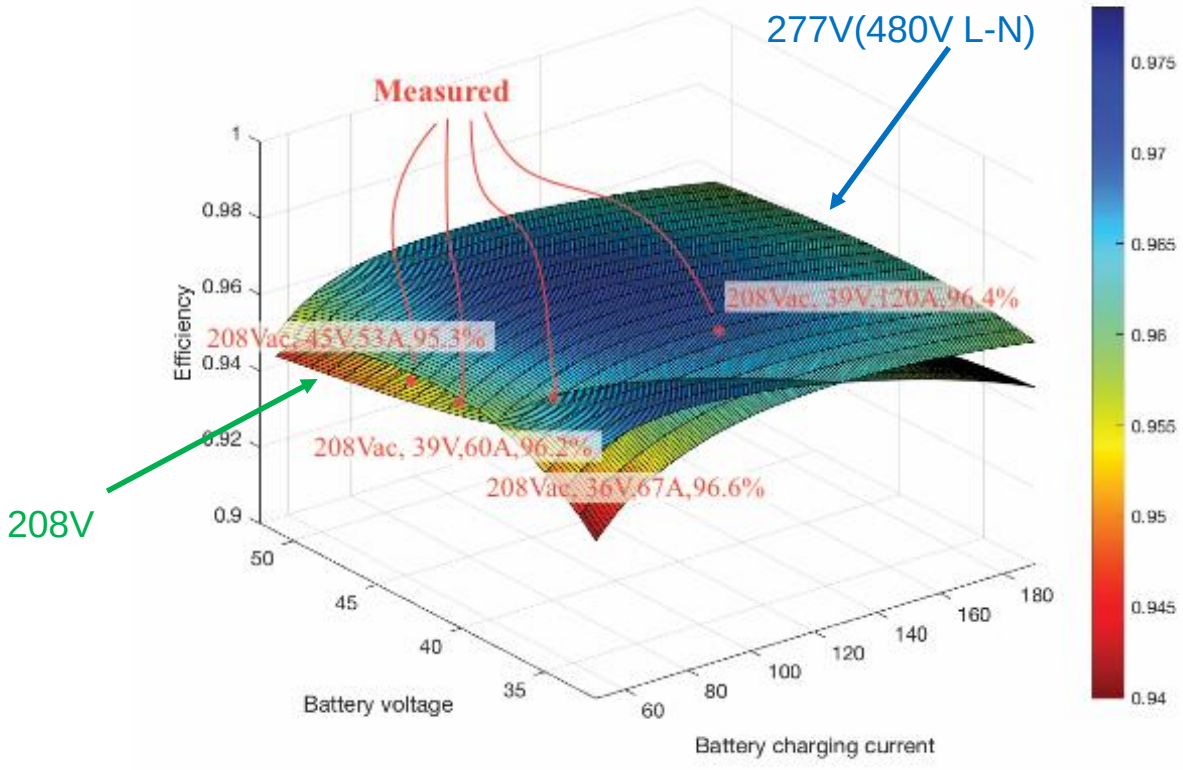

Accomplishments: Controller

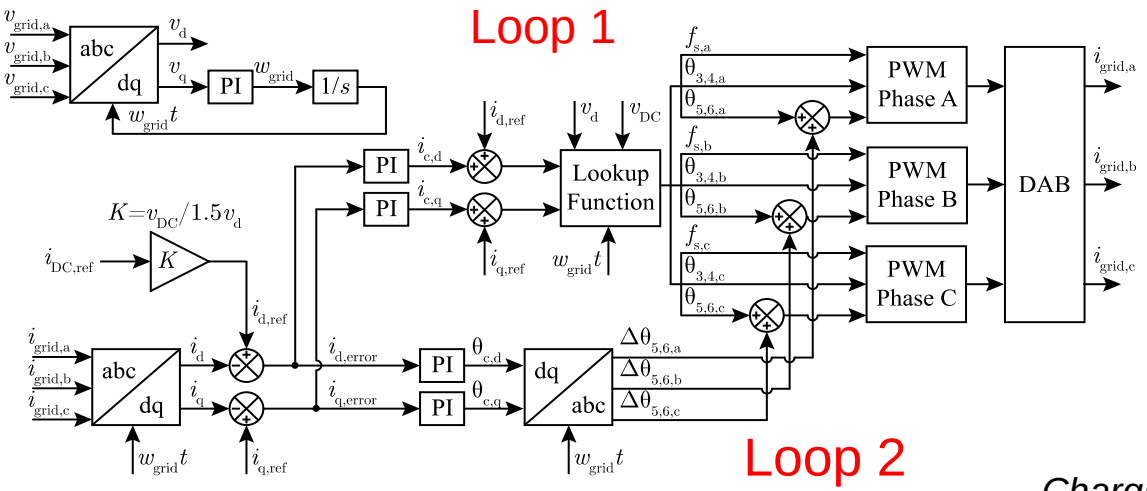

Dual Loop Model-Predicted Control Diagram for The 3-phase DC/AC Charger

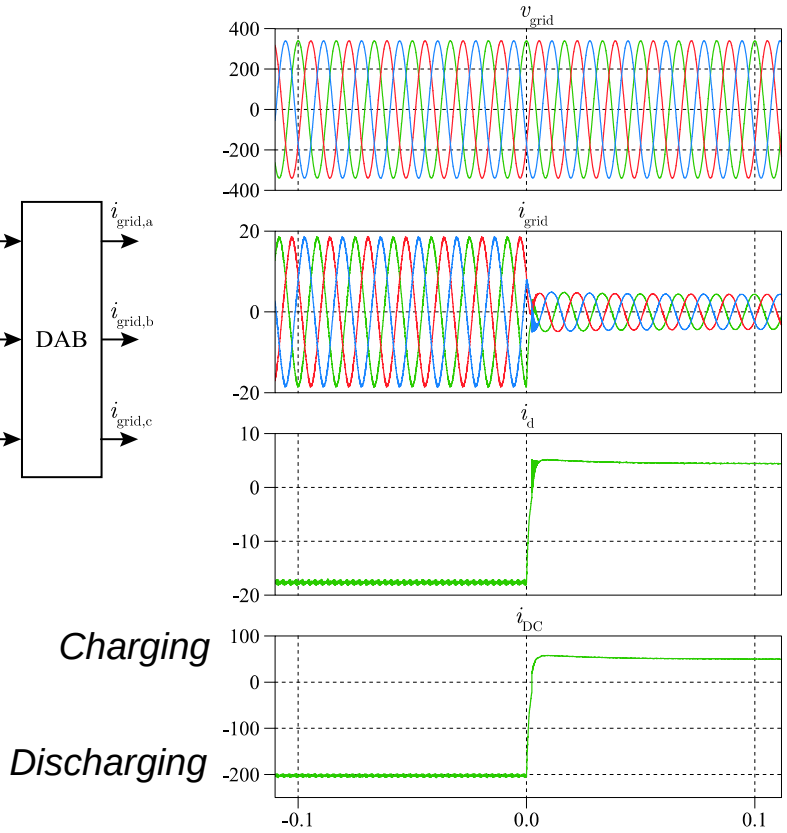

Transient simulation 200A discharging to 50A charging
Vac=480V

Accomplishments: Battery Integration and Test

vab
vbc
ia
ib
ic
vdc
idc

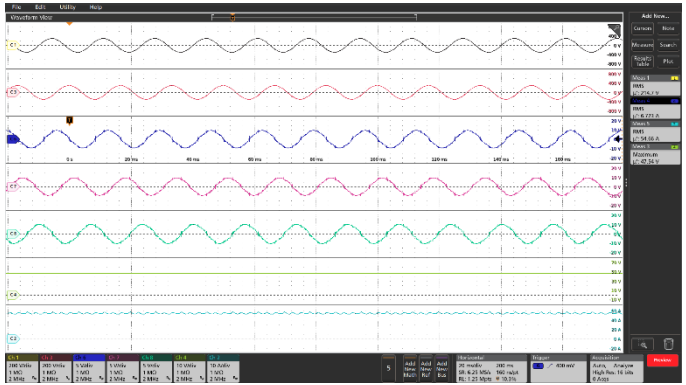

Grid voltage *vab*, *vbc*, grid current *ia ib ic*, DC battery *vdc* and battery current *idc* for **battery discharging** at 55A, 47.5V with 208V grid

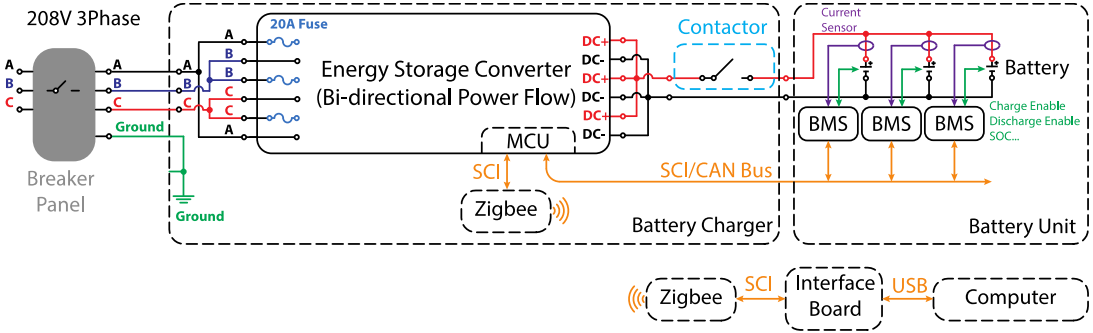

System wiring diagram with connection to 208V grid

idc
vdc
Switching current
Grid voltage
PLL

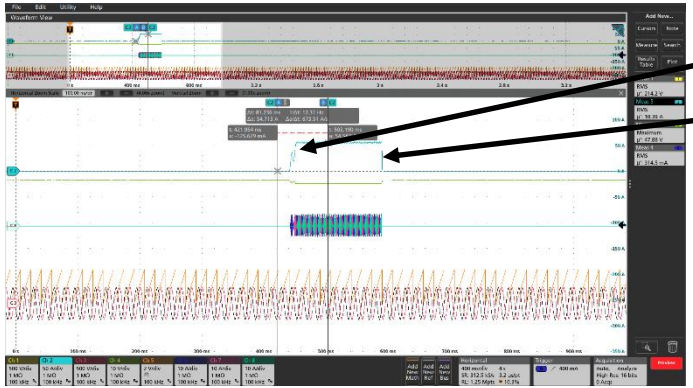

Start discharge 55A

Stop after 200ms

Transient waveform for jump start to 55A discharging and stop after 200ms

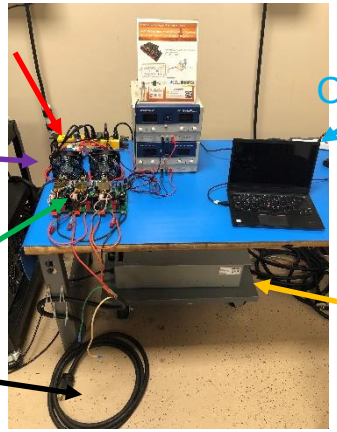

Experimental setup

Accomplishments: Battery Integration and Test

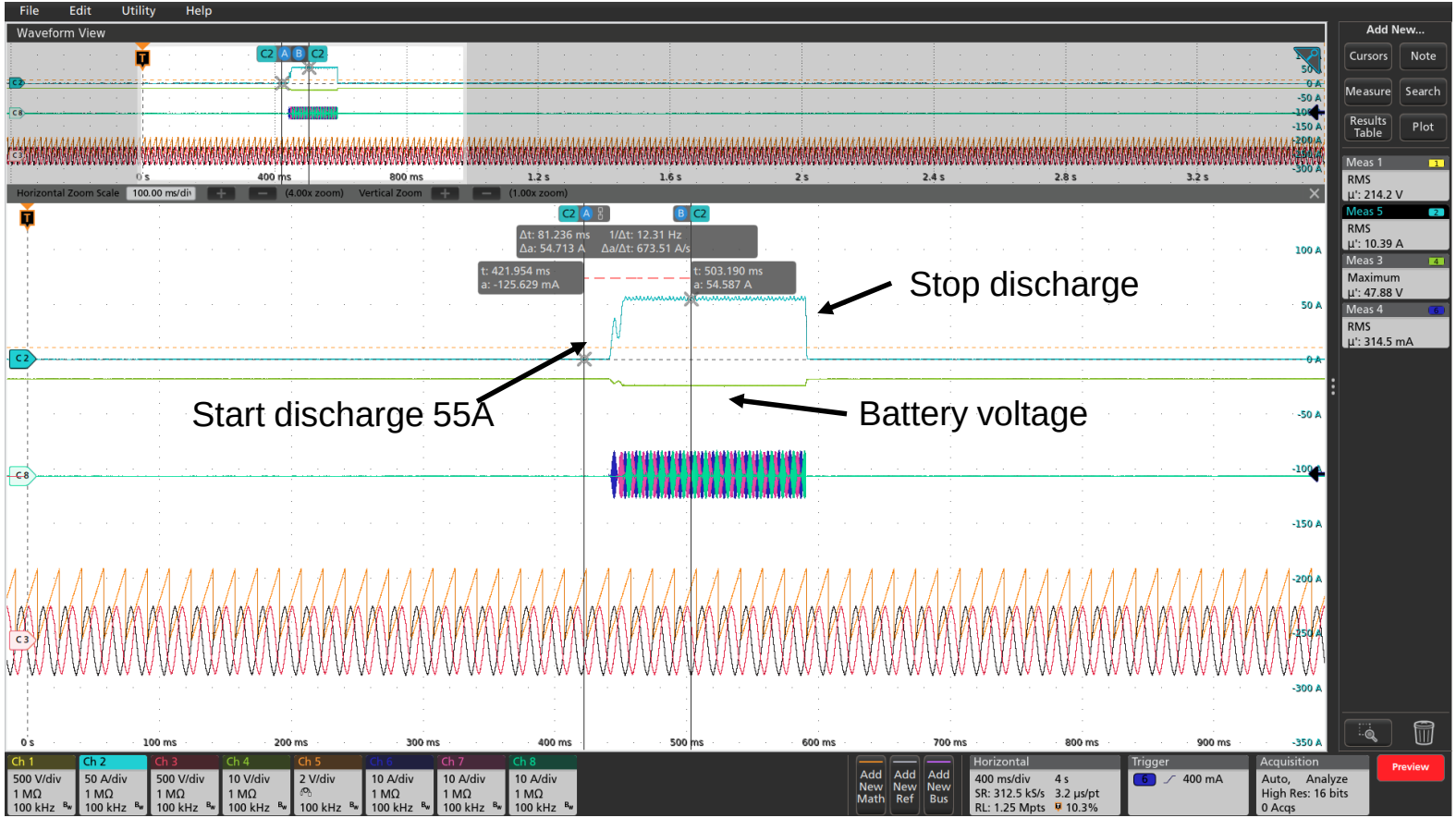

Future Plan

- Comprehensive charging and discharging tests with Li-ion battery
- Collaboration with Urban Electric Power (UEP) to develop and demonstrate a complete Plug-and-play BESS
  - GaN battery charger into a modular enclosure
  - Testing with UEP $ZnMnO_2$ battery
  - Demonstrate plug and play feature
- Study parallel of the proposed system for higher power

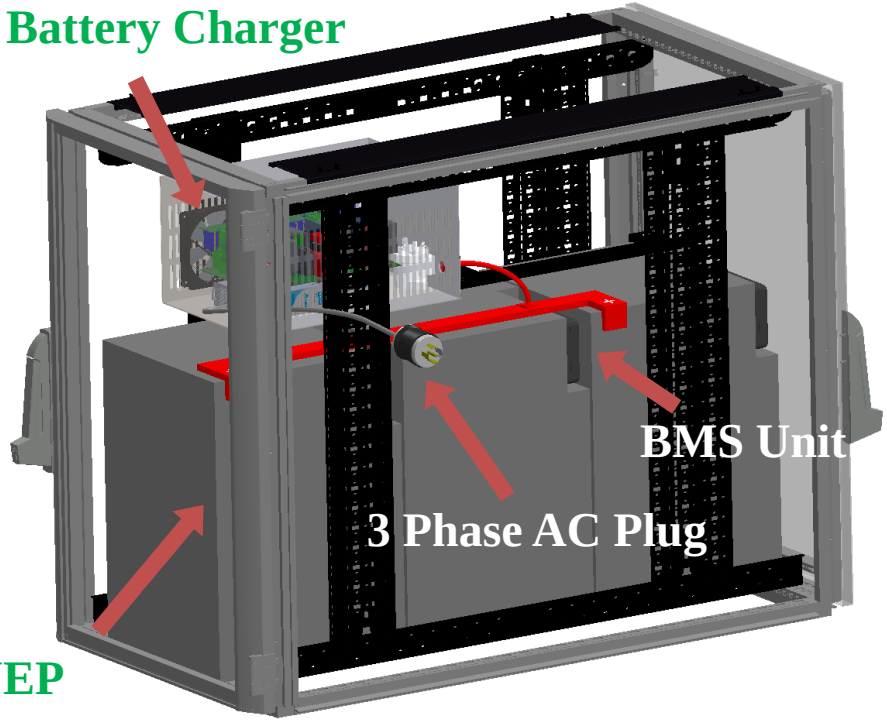

10 kWH BESS Enclosure Model

- *Dimension:* $24"(w) \times 42"(d) \times 32"(h)$;
- *Battery Module:* $12.5"(w) \times 39"(d) \times 18"(h)$.

URBAN ELECTRIC POWER

THANK YOU!

This project is funded by Department of Energy's Energy Storage Program managed by Dr. Imre Gyuk.

U.S. DEPARTMENT OF ENERGY

Many thanks to Dr. Stan Atcitty of SNL for his technical leadership

Sandia National Laboratories

For more info about this project: please contact Dr. Alex Huang, aqhuang@utexas.edu