Power electronic system development for secondary use system integration

Michael Starke, PhD

ORNL Energy Storage Program Manager

ORNL is managed by UT-Battelle, LLC for the US Department of Energy

Project Objectives

Industry Acceptance

- ✓ Solve the challenges of seamlessly **integrating secondary use energy storage** into a common integrated grid solution.
- ✓ Focus on 100kW systems to integrate **multiple secondary use systems** into a single platform with different chemistries and ages.
- ✓ Drive **industry acceptance** of technology by developing additional features and increased functionality and demonstrating technology with best practices including FMEA development.

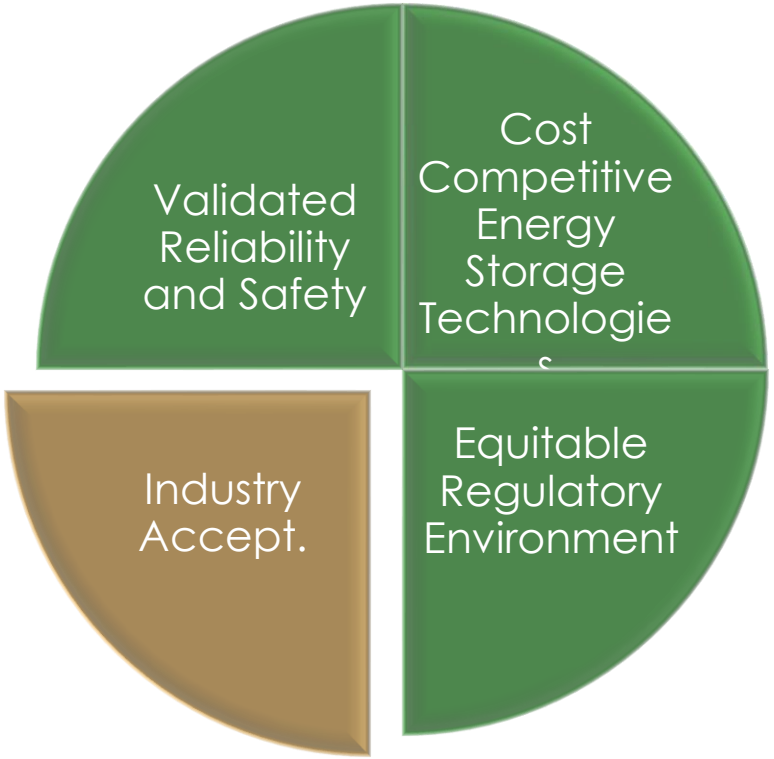

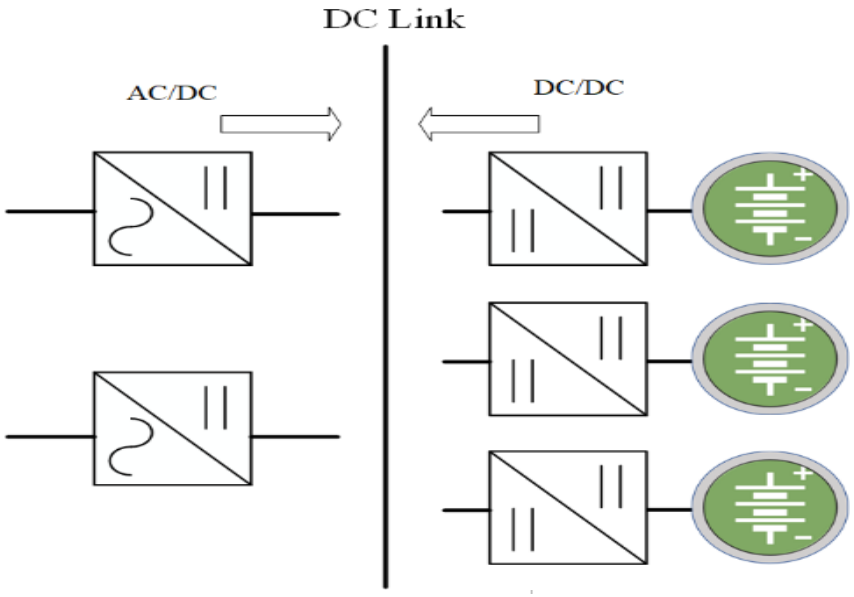

Overall Approach

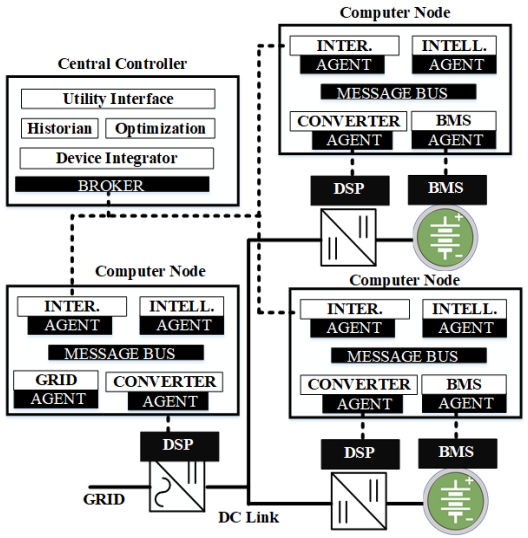

Initial Design

50kW DC/DC

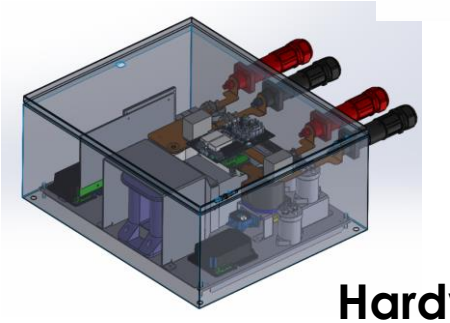

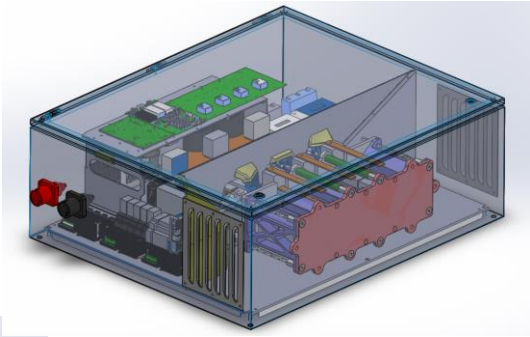

100kW Inverter

Hardware Design

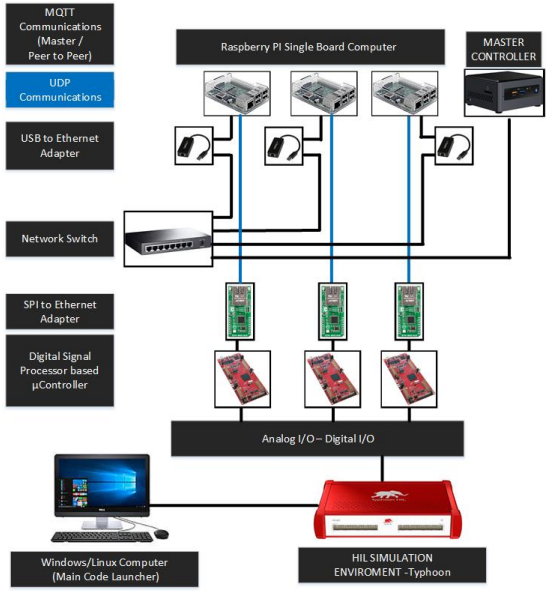

Controller-Hardware In the Loop

Software Architecture

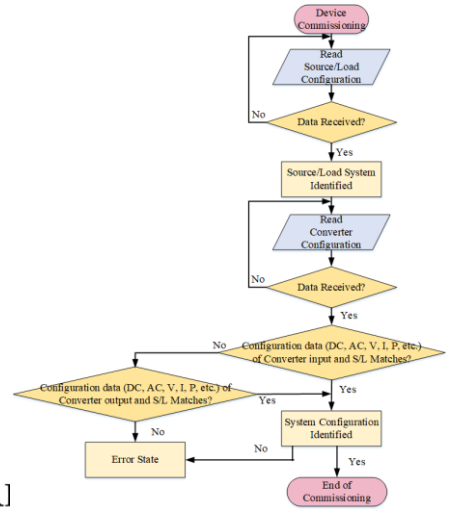

Software Development

Hardware

50kW DC/DC

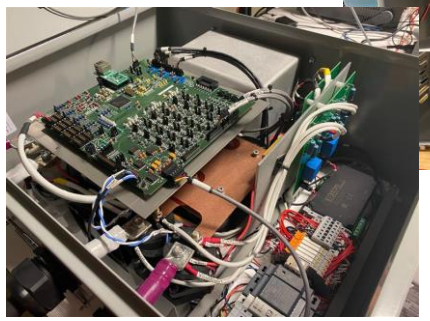

100kW Inverter

OAK RI National Laboratory

Open slide master to edit

Leveraging Success of Residential Prototype

- **Battery system incorporates self protection and controls**
- **Include contactors with status feedback**
- **Incorporated new Battery Management System (BMS) with multiple communication interfaces.**

Extending Capabilities: Framework of Agents and Features

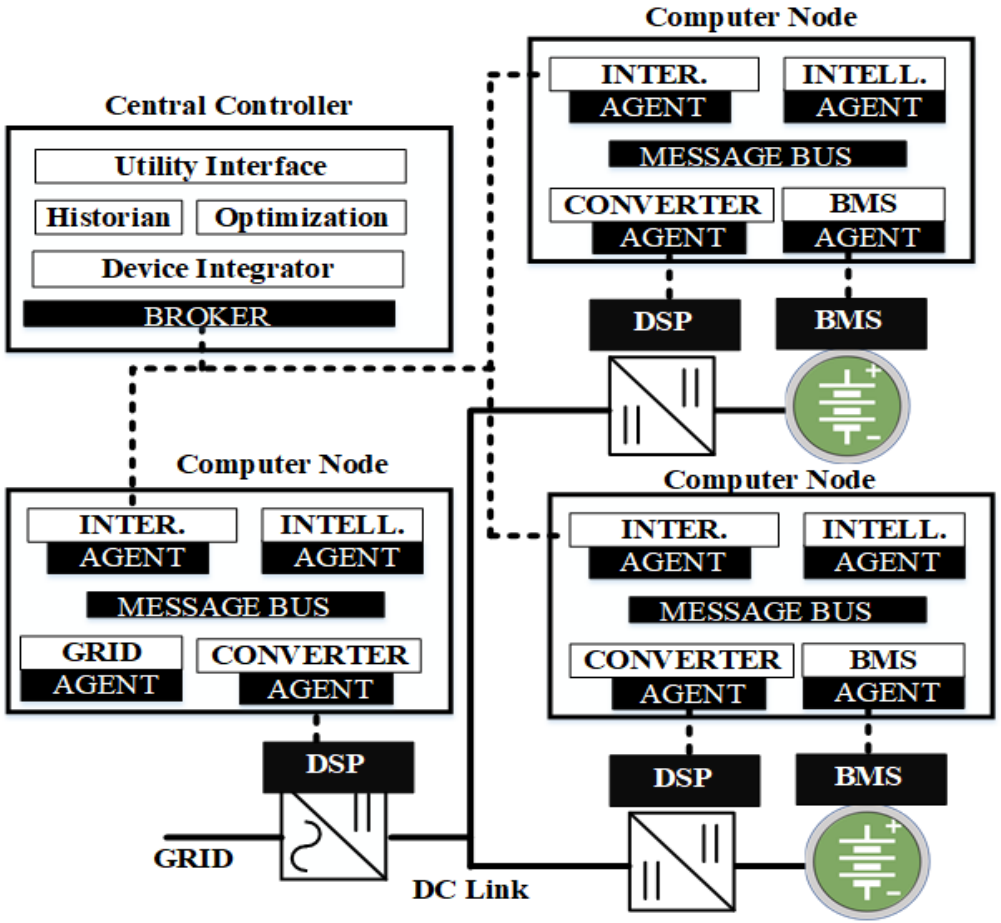

Agent System Framework

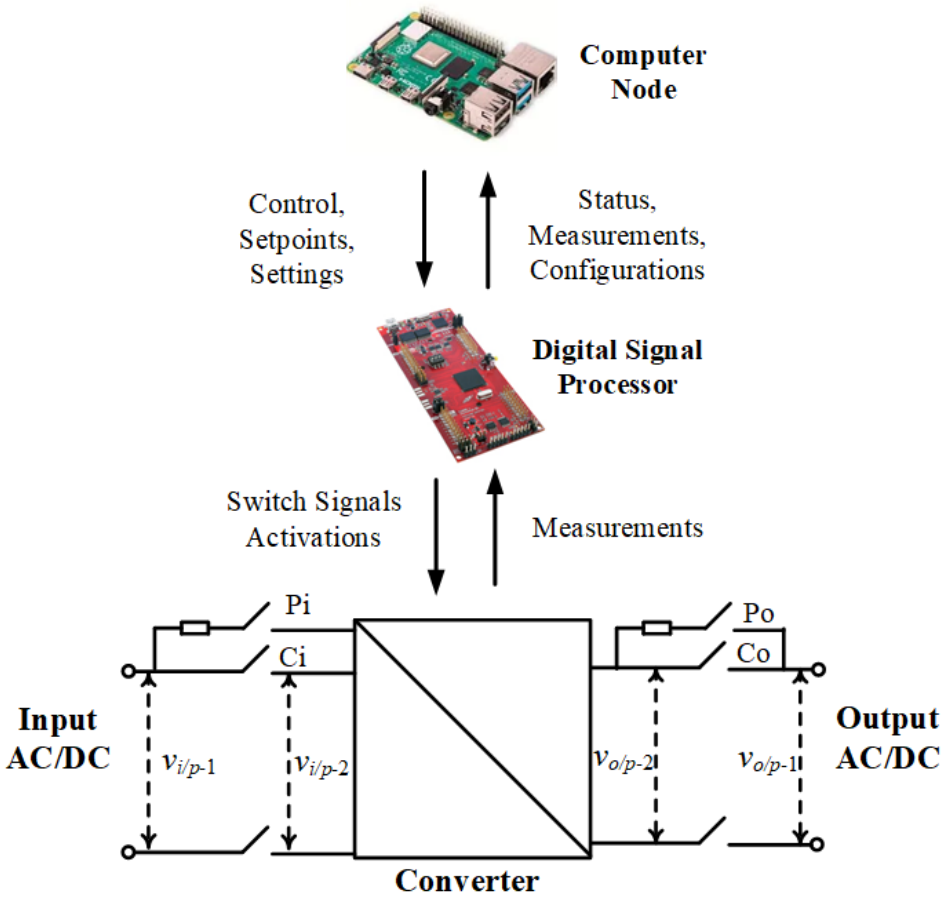

Plug and Play Adoption in Hierarchy

OAK RIDGE National Laboratory
Open slide master to edit

Communication and Controller HIL Testbed and Evaluation

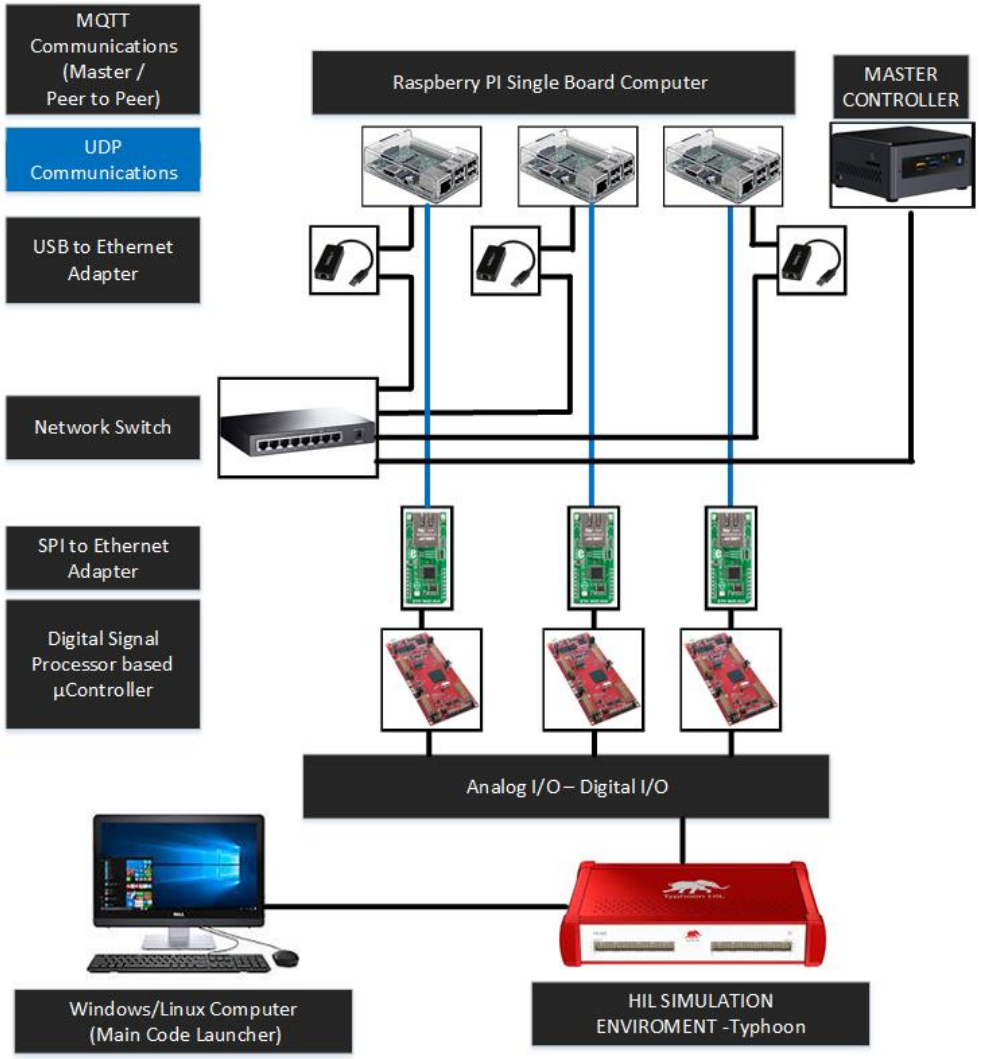

CHIL Validation

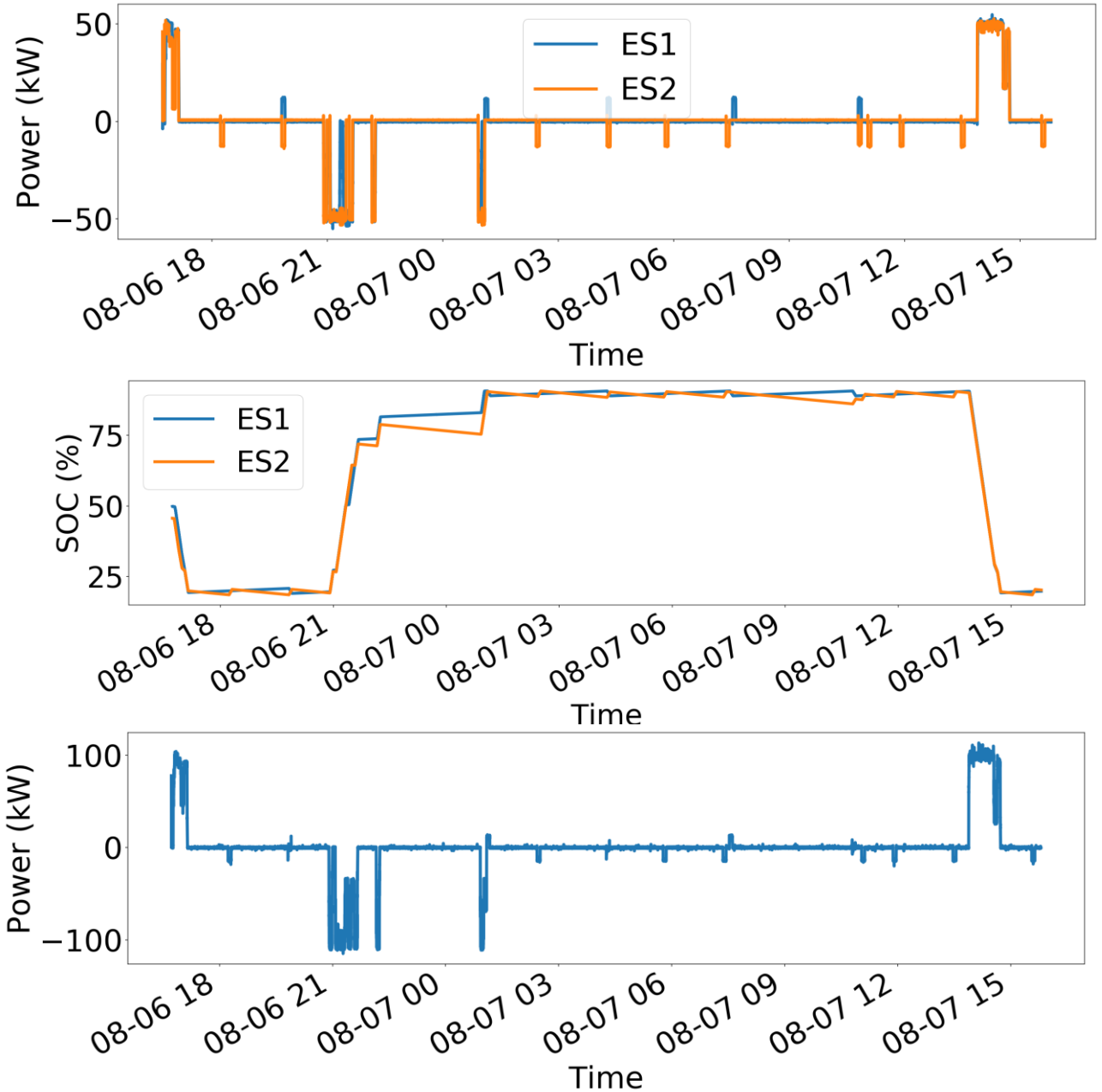

OAK RIDGE National Laboratory

Hardware

ORNL Developed Power Stage

ORNL Developed Interface

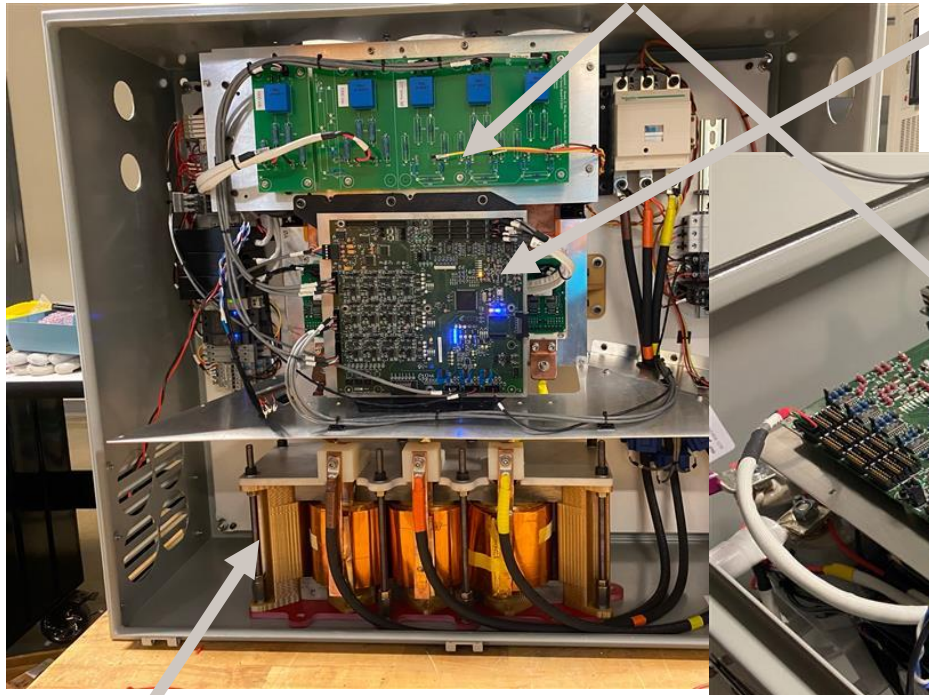

100kW Inverter

ORNL Developed Filtering

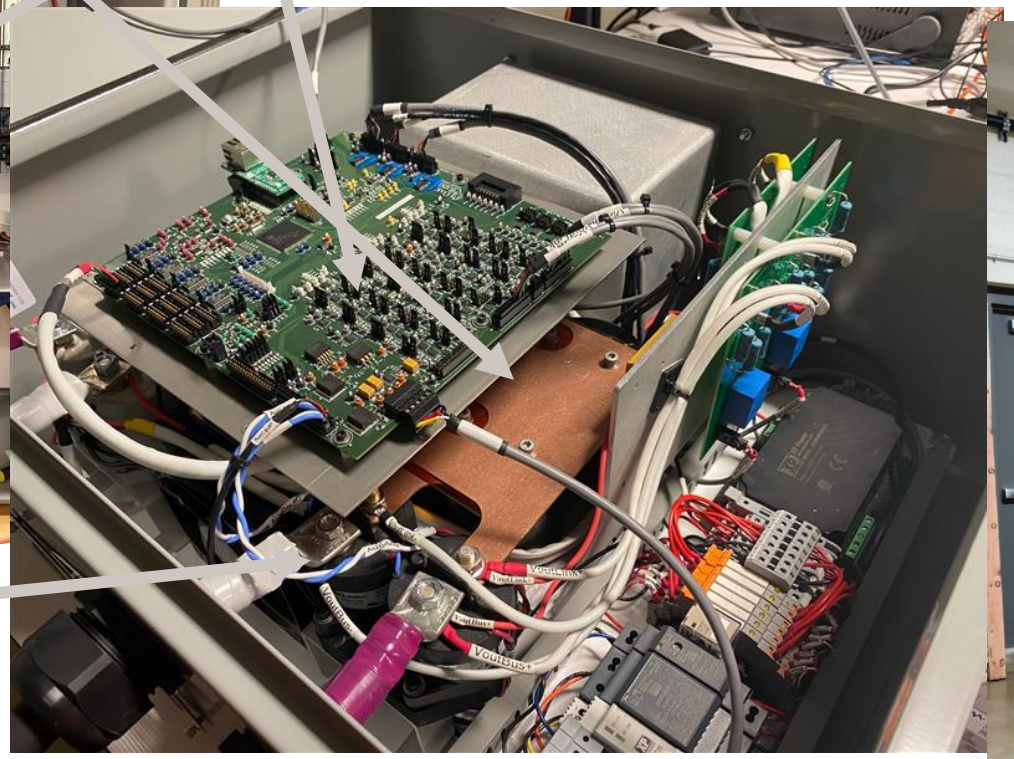

50kW DC/DC

50kW Spiers Secondary Use System

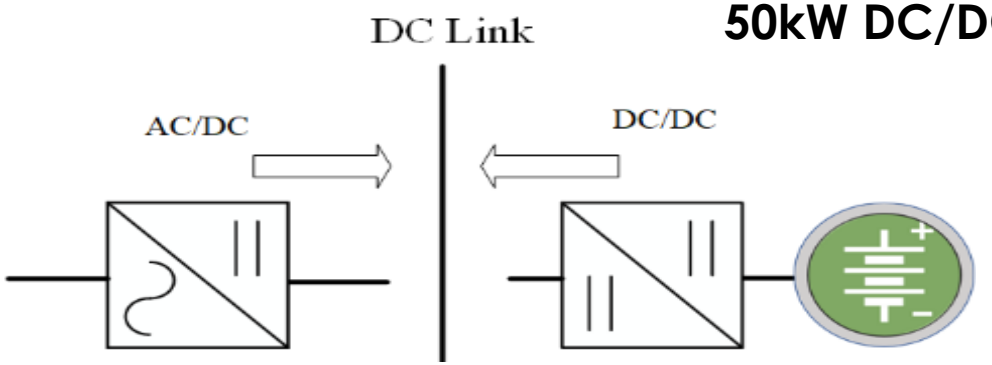

OAK RIDGE National Laboratory

Open slide master to edit

Testbed

Hardware Layout

Control Interface

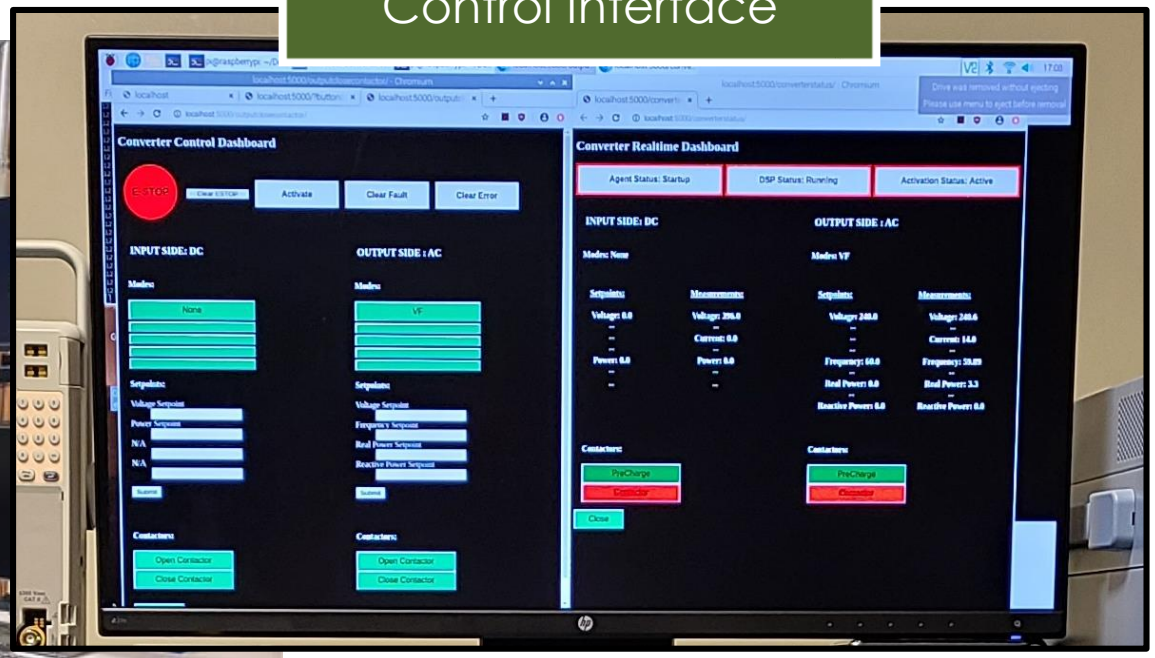

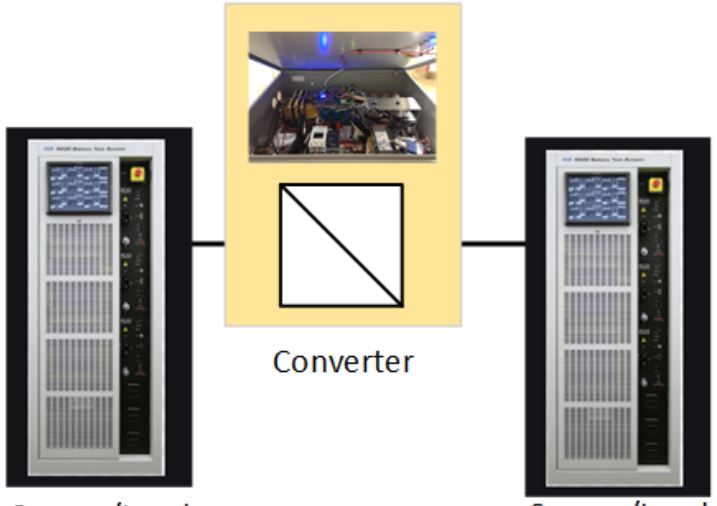

OAK RIDGE National Laboratory

Open slide master to edit

Testing of Individual Converters

100kW Inverter Testing

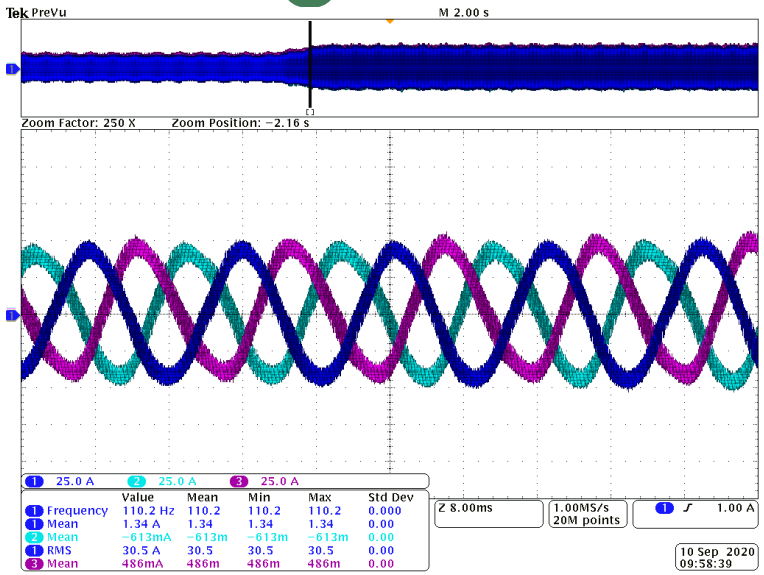

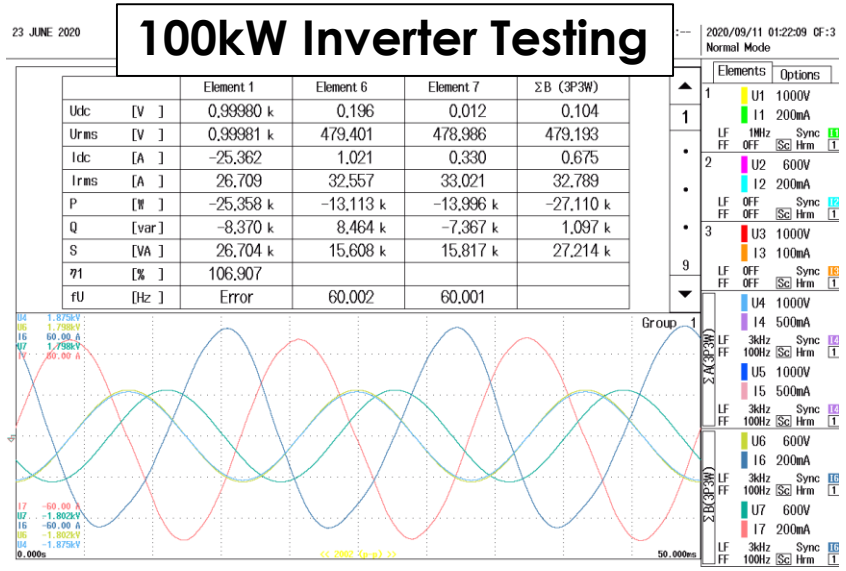

50kW DC/DC Testing

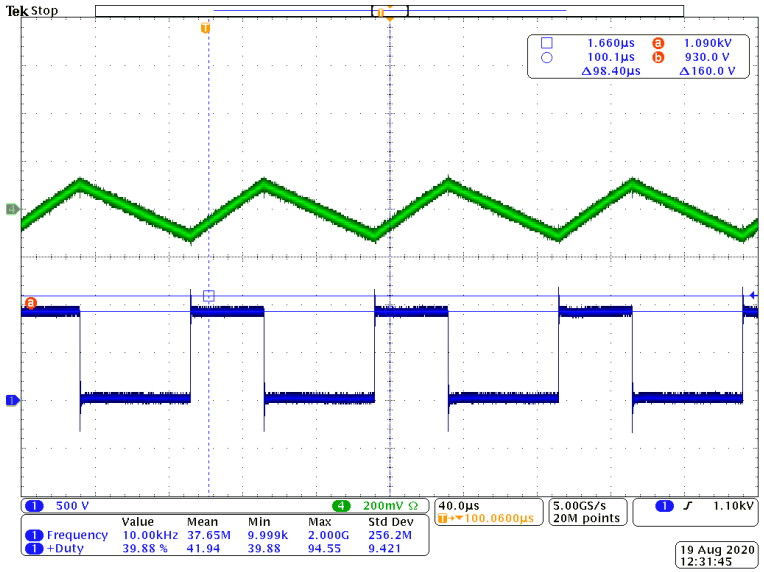

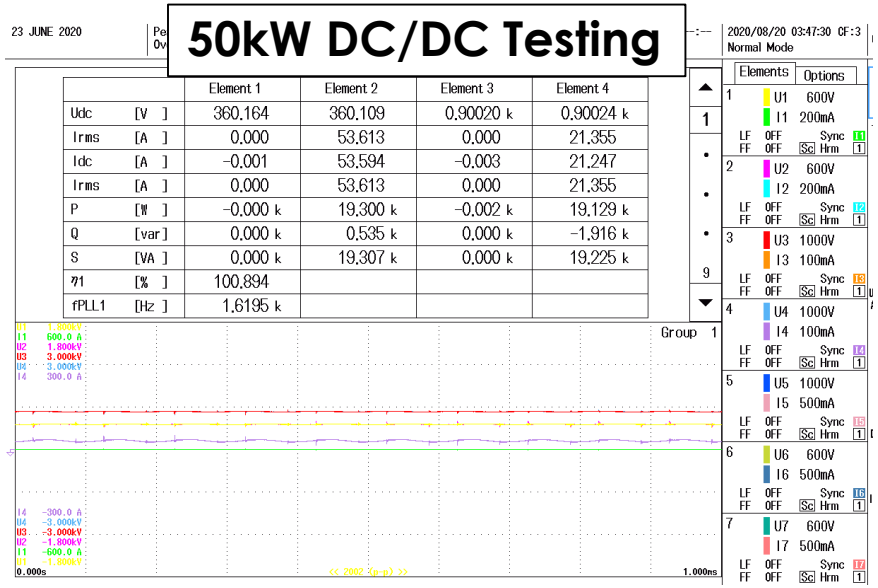

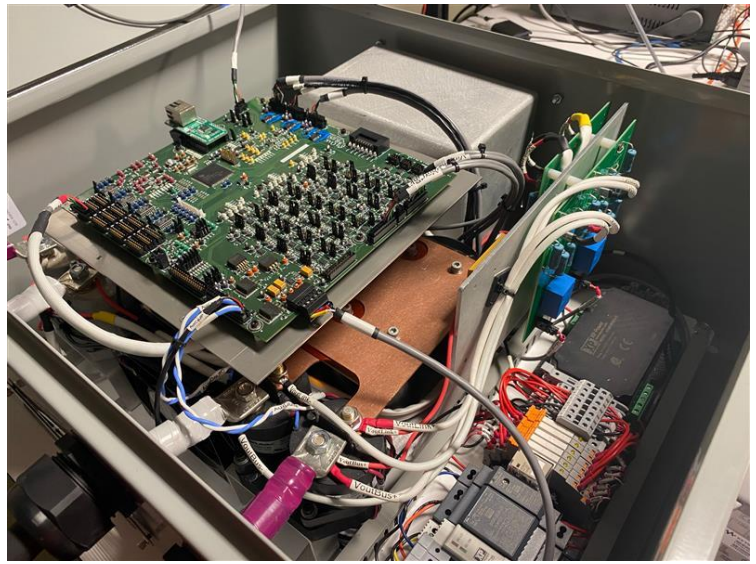

OAK RIDGE National Laboratory

Open slide master to edit

Testing Full System

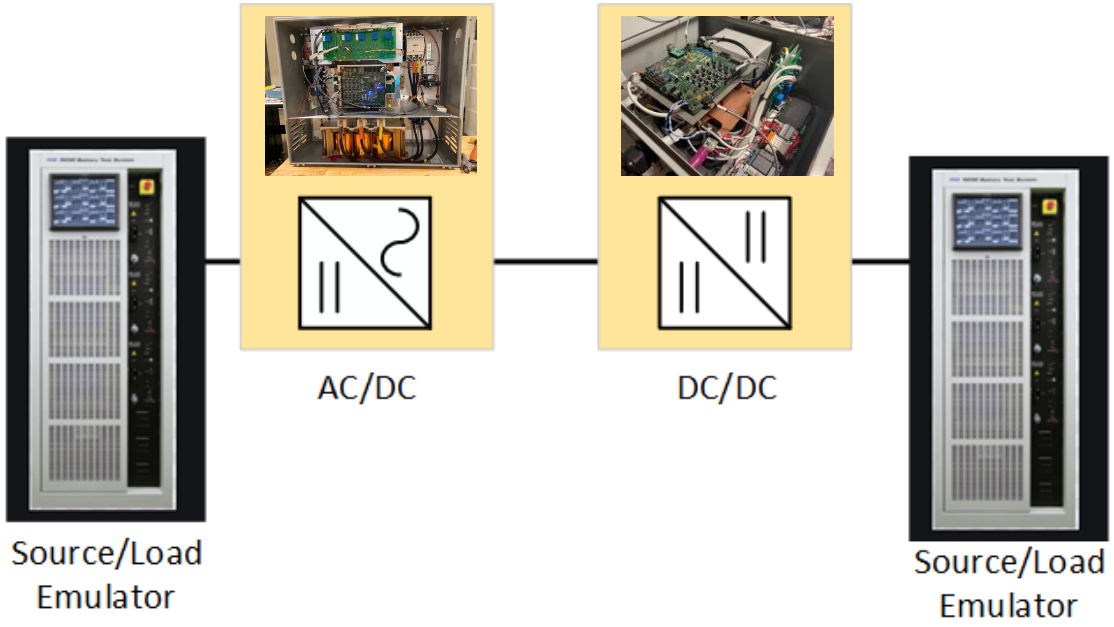

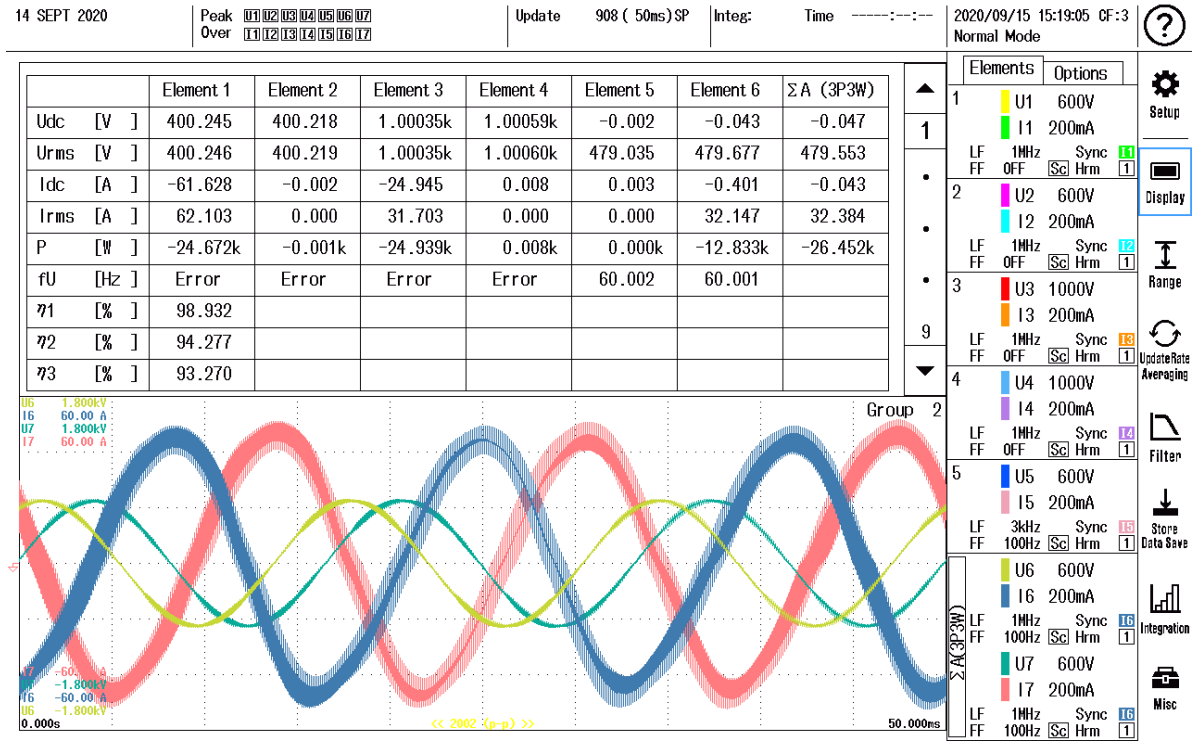

Achieved: Demonstrating new approaches to plug-and-play solutions in full system implementation

OAK RIDGE National Laboratory

Open slide master to edit

Challenges encountered

- COVID-19 significant hurdle requiring new approaches

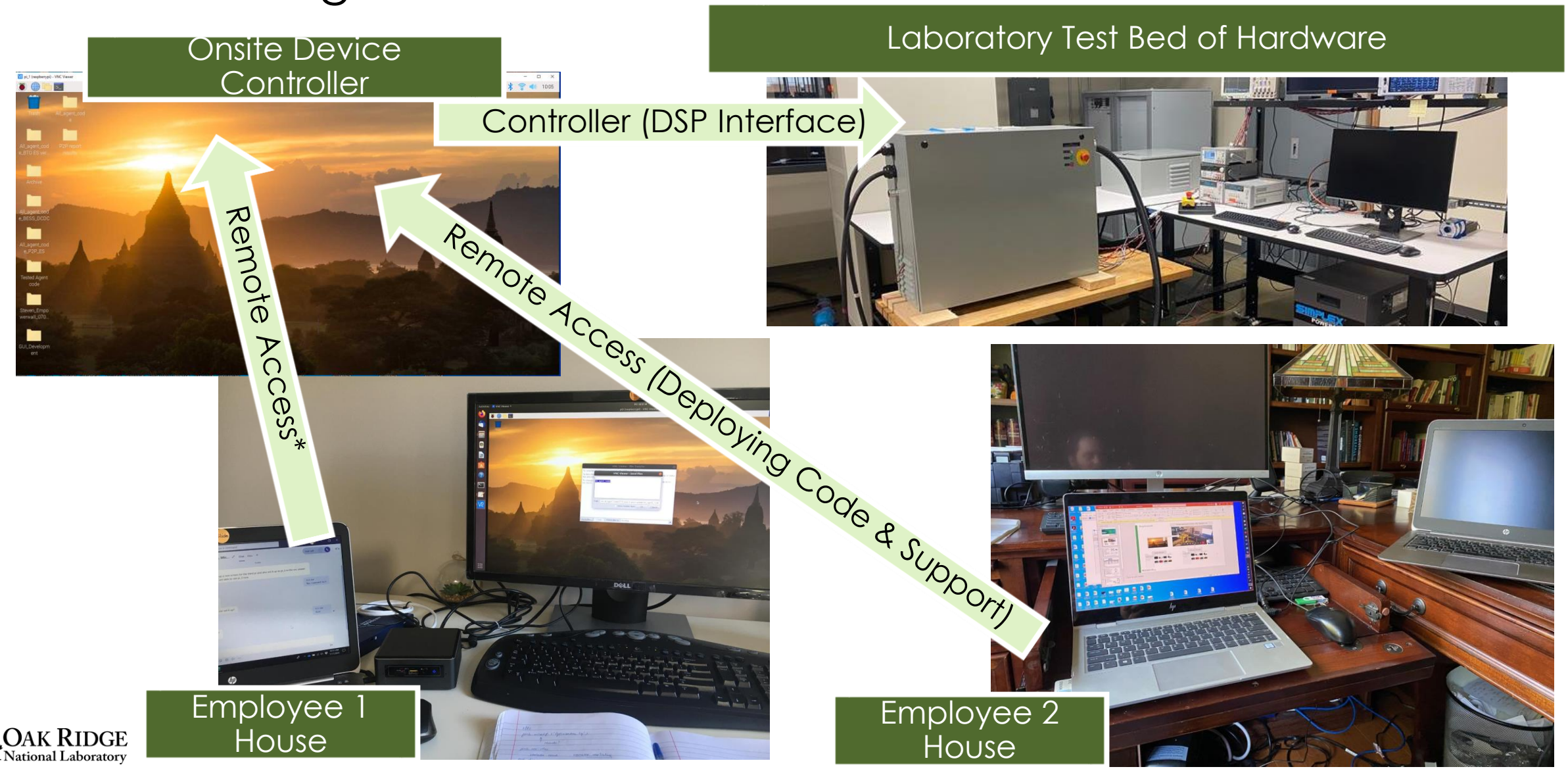

FY20 and Future Work

- **Accomplishments:**
  - Conference papers published
  - Completed Full CHIL Implementation of System Design
  - Completed Hardware Design
  - Completed Single System Testing of AC/DC and DC/DC
  - Completed Initial System Testing of Interconnected AC/DC and DC/DC

- **Future Work:**
  - Long-term Testing and Use Case Evaluation
  - Deployment and Long-term testing Opportunities
  - Through CEDS program, looking at Cyber Security Interfaces
  - Journals in development

Acknowledgments

This work is supported by Dr. Imre Gyuk, Manager, Energy Storage Program, Office of Electricity, Department of Energy.

Team

Michael Starke, PhD
Systems and Software Architect

Madhu Chinthavali, PhD
Power Electronics Architecture

Steven Campbell
Systems Integration and Evaluation

Brian Rowden, PhD
Hardware Architect

Rafal Wojda, PhD
Magnetics

Christian Boone
Mechanical CAD architect

Sheng Zheng, PhD
Power Electronics system Integration

Radha Moorthy, PhD
Communications and Controls

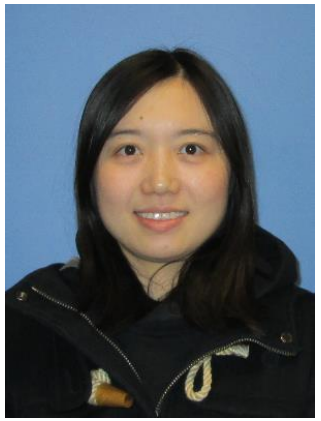

Bailu Xiao, PhD
Software and Agent Systems

Anup Thapa
Imbedded Hardware Control

Pankaj Bhowmik, PhD
CHIL Evaluation

Open slide master to edit