Predicting Reliability, Improving Safety and Resiliency in Grid Connected Battery Energy Storage Systems

Presented by:
Prof. Kaushik Rajashekara ksraja@uh.edu

Sandia National Laboratories

UNIVERSITY of HOUSTON
CULLEN COLLEGE of ENGINEERING

Acknowledgement

- We gratefully acknowledge support for this work from *Dr. Imre Gyuk* and the Office of Electricity at U.S. DOE.
- We would like to thank Dr. Stanley Atcitty, Technical Lead, Sandia National Laboratories for continuous support and guidance on being part of this research project.

Team Members:

Prof. Kaushik Rajashekara, University of Houston

Dr. Harish Krishnamoorthy, University of Houston

Amin Sadat, University of Houston

Jean Marcos Lobo Da Fonseca, University of Houston

Krishna Raj, University of Houston

Dr. Gnana Sambandam Kulothungan, University of Houston

Sandia National Laboratories

UNIVERSITY of HOUSTON
CULLEN COLLEGE of ENGINEERING

Objectives

- To improve the **safety, resiliency** and **reliability** aspects of lithium ion based Battery Energy Storage System (BESS), using the power converter and its control, interfaced to the grid.
  - To develop modular, transformer-less multilevel inverter topologies for grid integration of BESS.
  - To develop self-battery management system (BMS) using power converter performing state of charge (SoC) balancing scheme.
  - To address resilient operation of energy storage system with the interfacing converter under adverse grid scenarios.
  - To develop accurate equivalent circuit models of Li-ion batteries for State of Charge and State of Health estimation.
  - To identify component level reliability parameters for SiC MOSFET, battery, etc, by performing accelerated life tests.
  - To evaluate the component-level remaining useful life (RUL) index for SiC-FET and Li-ion batteries; and to predict the system-level RUL for grid connected modular BES converter system.

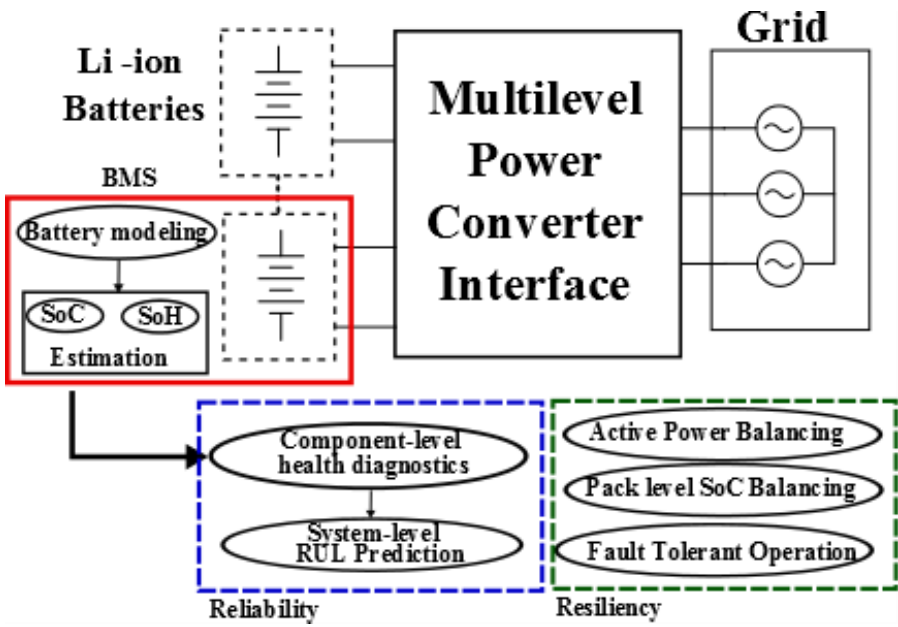

Fig. 1. Grid connected BESS.

Sandia National Laboratories

UNIVERSITY of HOUSTON
CULLEN COLLEGE of ENGINEERING

Milestones and Targets

Year	Milestones	Deliverables	Target
Year 1 (Completed)	• To develop a grid connected multilevel converter topology for BESS with self-battery management system.	• A single phase **1kW** laboratory scale hardware prototype using **CHB** converter to verify the proposed **SoC balancing** scheme	☑ To achieve more than **50 % improvement** in rate of SoC balancing using rated current operation compared to **U**nity **P**ower **F**actor (**UPF**) operation at half the power exchange.
Year II (Completed)	• To address resilient BESS operation through power converter under adverse grid conditions; • To identify state of health indicators of power electronic components in a BESS.	• Improved equivalent circuit model of Li-ion batteries considering effect of SoC and temperature. • Reliability evaluation procedure for SiC devices at high temperatures.	☑ To develop SoC and temperature dependent equivalent circuit model (ECM), with model accuracy improvement above **50%.** ☑ To develop reliability evaluation model of SiC power MOSFETs.
Year III (Ongoing)	• to develop an integrated approach to predict system level RUL of BESS using power converters	• Prediction algorithm to evaluate overall reliability and RUL of power devices and batteries for safe operation of	☐ To predict system level BESS RUL with an estimation error of less than **500** Hrs. in about 20 years.

Resilient BESS Operation under Adverse Grid Scenarios

Jean M. L. Fonseca, Krishna Raj and Kaushik Rajashekara. "Active Power Balancing Techniques for Resilient Battery Energy Storage Systems Under Asymmetric Grid Voltage Scenarios", submitted to APEC 2021 - Phoenix, Arizona.

Sandia National Laboratories

UNIVERSITY of HOUSTON
CULLEN COLLEGE of ENGINEERING

Resilient BESS under Asymmetric Grid Voltage Scenarios through Active Power Balancing

- BESS needs to provide resilient operation while providing grid voltage support/var compensation during adverse grid voltage conditions.
- Example: low voltage ride-through (LVRT) operation of BESS during adverse grid voltage scenarios such as undervoltage and voltage sag.
- Developed a Modular Multilevel Converter (MMC) topology to achieve resilient operation for BESS using active power balancing scheme.

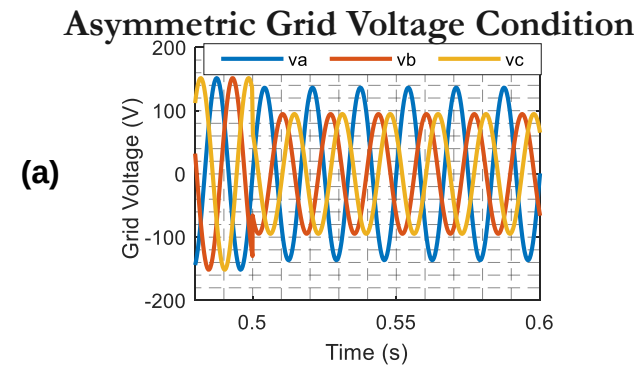

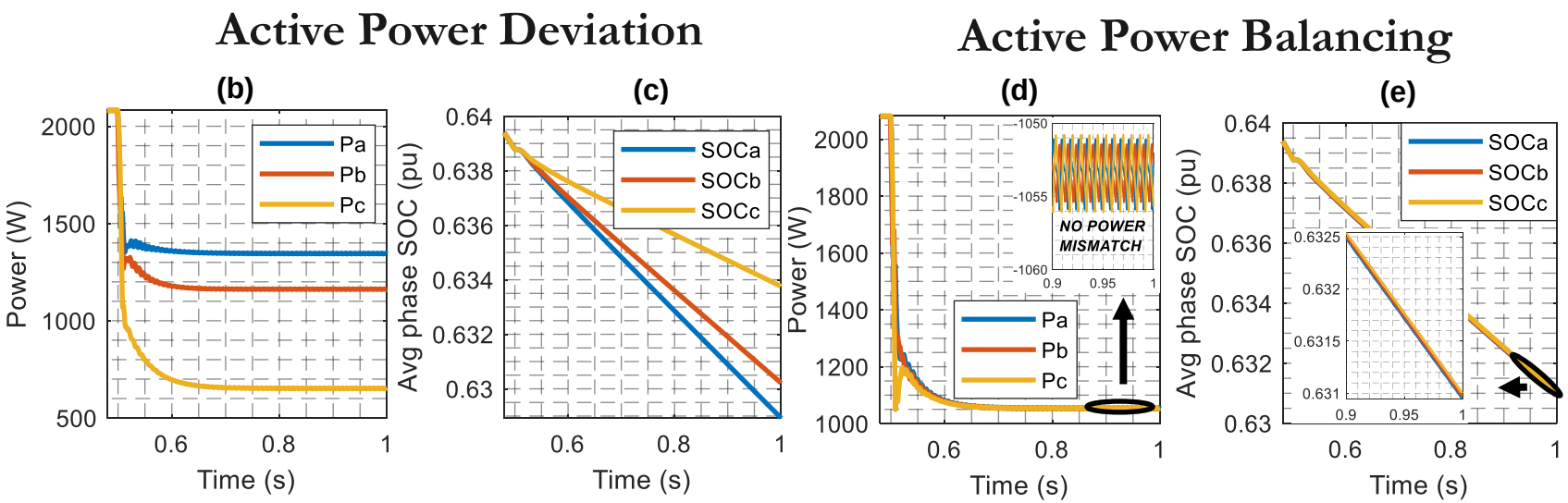

Fig. 3. (a) Grid voltages; (b) MMC leg power without power balancing; (c) average per phase SOC without power balancing; (d) MMC per-phase power with power balancing; (e) average per phase SOC with power balancing.

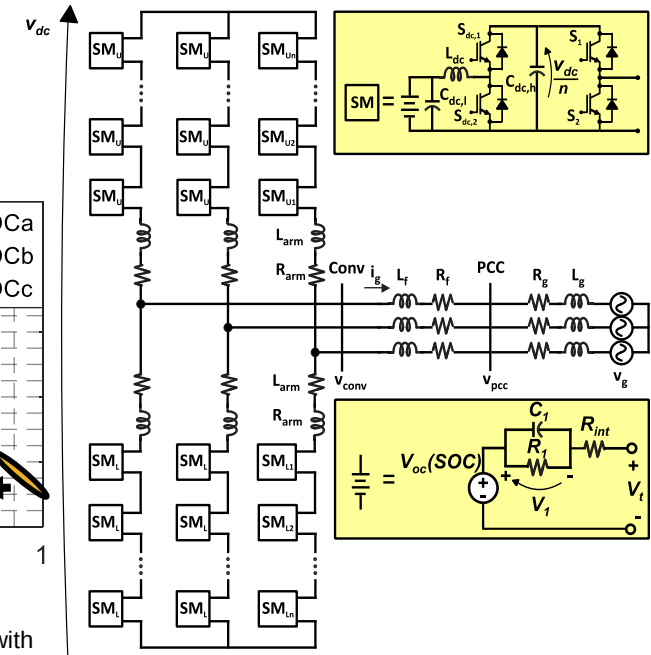

Fig. 2. MMC-based BESS power circuit.

Sandia National Laboratories

UNIVERSITY of HOUSTON
CULLEN COLLEGE of ENGINEERING

Characterization and Modeling of Li-ion Batteries

Jean M. L. Fonseca, Gnana Sambandam Kulothungan, Krishna Raj, Kaushik Rajashekara, and Stan Atcitty “A Novel State of Charge Dependent Equivalent Circuit Model Parameter Offline Estimation for Lithium-ion Batteries in Grid Energy Storage Applications,” accepted for IAS Annual Meeting 2020- Detroit, Michigan.

Sandia National Laboratories

UNIVERSITY of HOUSTON
CULLEN COLLEGE of ENGINEERING

Offline Li-ion Battery Characterization for BESS BMS

- Improved equivalent circuit models (ECM) is developed to obtain accurate state of charge (SOC) and state of health (SOH).
- The circuit parameters are obtained through subspace identification:
  - Methodology 1 (RC-Model): uses the whole dataset to find a unique model.
  - Methodology 2 (RC-SOC Model): uses dataset at every SOC to find several models.
- Obtained ECMs are used to correlate the parameters with the SOC and temperature through polynomial regression, to develop unique ECM.
- The developed model improves the accuracy of the terminal voltage estimation by approximately 50%.

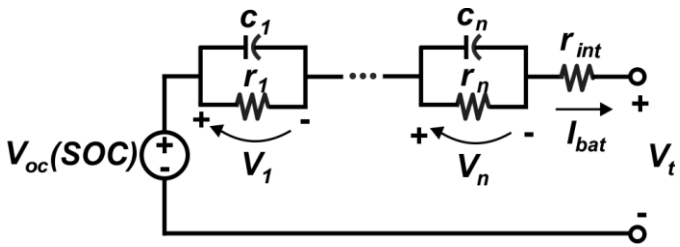

Fig. 4. Equivalent circuit model.

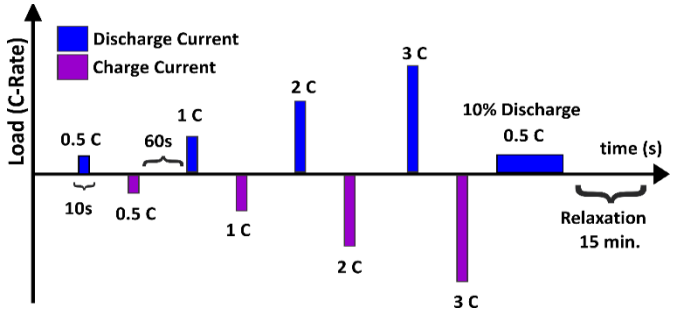

Fig. 5. Dynamic load profile for a given SOC.

TABLE I. RMSE COMPARISON FOR DIFFERENT MODELS

Error	MODEL			
	1RC	*2RC*	*1RC-SOC*	*2RC-SOC*
T=35ºC				
RMSE	17.6 mV	14.4 mV	8.3 mV	7.3 mV
T=25ºC				
RMSE	23.3 mV	18.8 mV	9.9 mV	8.4 mV
T=15ºC				
RMSE	35.5 mV	30.3 mV	15.5 mV	13.1 mV

Sandia National Laboratories

UNIVERSITY of HOUSTON
CULLEN COLLEGE of ENGINEERING

Remaining Useful Lifetime (RUL) Prediction of Power Converters

Amin Rahnama Sadat, Harish Sarma Krishnamoorthy, Kaushik Rajashekara. “Power FET Reliability Evaluation based on Thermal Equilibrium during Mission-Profile Characterization”, IEEE Power Electronics, Drives and Energy Systems (PEDES)-2020, Jaipur, India.

Sandia National Laboratories

UNIVERSITY of HOUSTON
CULLEN COLLEGE of ENGINEERING

Device Level Reliability Evaluation at High Temperature

- Component-level reliability evaluation needs degradation dataset. We take the evaluation procedure to next level through reliability evaluation at high temperature.

- High-Temperature Component-level RUL prediction involves:
  - Power and Thermal cycling on SiC-MOSFET Devices-Under-Test (DUT)
    - Injecting maximum DC current and heat to DUT during ON time operation.
  - Junction temperature and $R_{DS(ON)}$ measurement of DUT as temperature-sensitive electrical-parameters (TSEP).
  - Evaluation of RUL of DUT based on captured degradation data.

- Health indicator $R_{DS(ON)}$ is fitted to an exponential equation ($R_{DS(ON)} = a * e^{bt}$) to model the component level behavior during the operational lifetime.

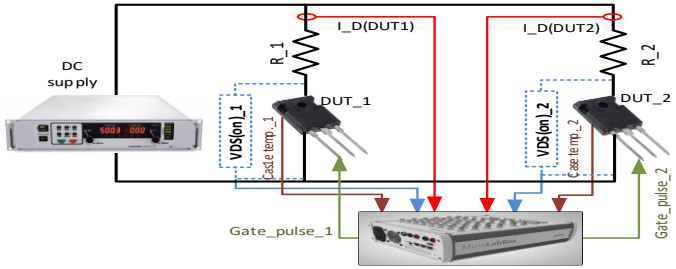

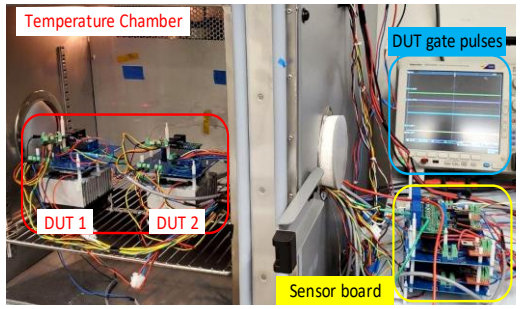

Fig. 6. The test setup for SiC-MOSFET degradation (a) Schematic (b) experimental Tamb =75°C.

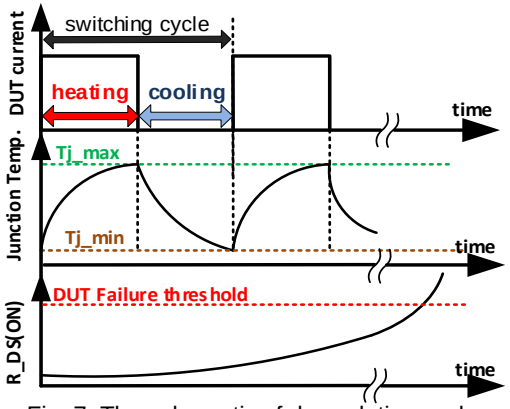

Fig. 7. The schematic of degradation cycle (power and thermal cycling).

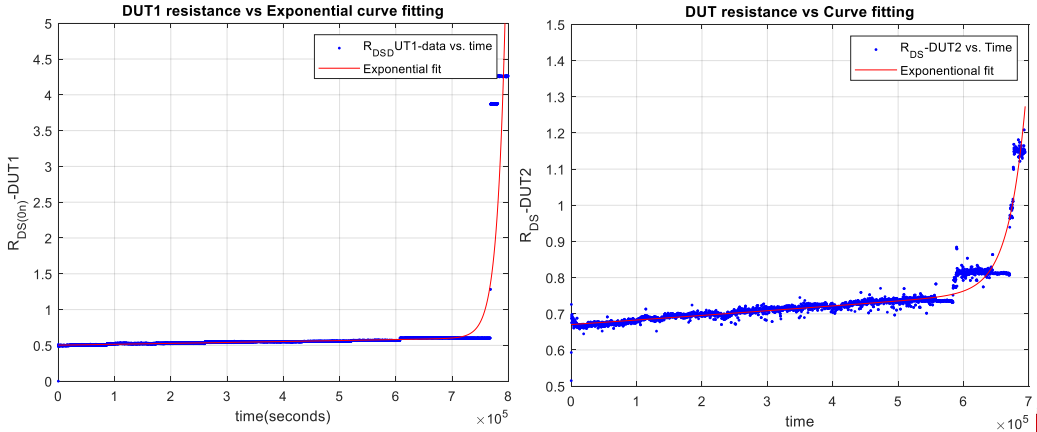

Fig. 8. The captured RDS(ON) data for DUT degradation at Tamb=75°C(a) DUT1 (b) DUT2.

Sandia National Laboratories

UNIVERSITY of HOUSTON
CULLEN COLLEGE of ENGINEERING

Converter Level Reliability Evaluation under Thermal Equilibrium

- Developed a new reliability evaluation of power FETs based on thermal equilibrium during mission profile characterization through converter operation.
- H-Bridge power converter is cycled through a mission profile consisting of different current steps, operated at different ambient temperatures.
- DUTs are cycled until the device fails or the reliability parameters such as RDS(ON) and the equilibrium junction temperature exceed a certain threshold value.
- Degradation data are captured for post data processing to evaluate Remaining-Useful-Lifetime (RUL).
  - **The proposed approach offers a new, efficient, reliability evaluation procedure for power FETs, considering ambient temperature variations and mission profile.**

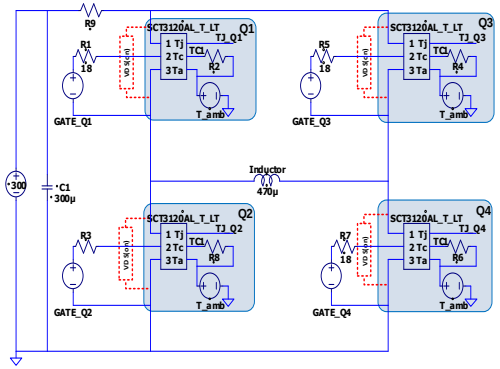

Fig. 9. The H-bridge degradation test setup.

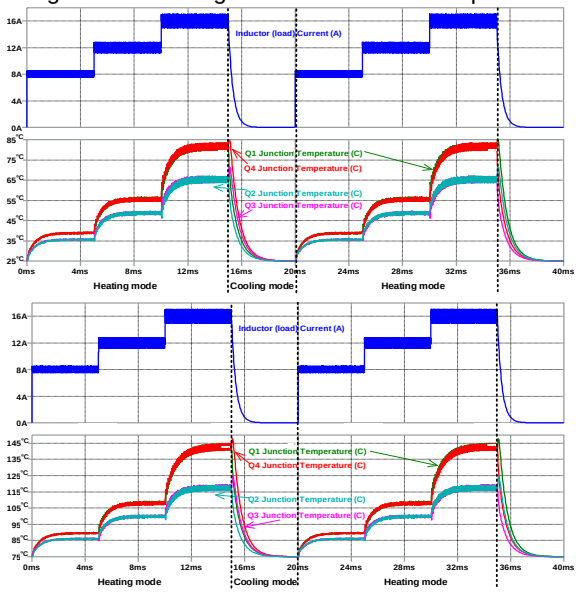

Fig. 10. (i) Inductor current (ii) Junction temperature of four devices Tamb=25°C and Tamb=75°C.

Sandia National Laboratories

UNIVERSITY of HOUSTON
CULLEN COLLEGE of ENGINEERING

Conclusion and Next Steps

- Developed a multilevel level inverter topology with active power balancing scheme to achieve resilient BESS operation under adverse grid conditions
- Developed an improved equivalent circuit model (ECM) considering SoC and temperature dependency, with more than 50% model accuracy improvement.
- Developed a method for reliability evaluation of SiC MOSFETs using data obtained through experimental degradation at high temperature.
- **Ongoing:**
  - Working on a new, efficient power FET reliability evaluation test procedure for SiC devices using thermal equilibrium characteristics, through power converter operation.
- **Next Steps:**
  - To obtain state of health indicators of Li-ion batteries under realistic mission load profile (as function of SoC and temperature) for component level RUL prediction.
  - to develop an integrated approach to predict system level RUL of BESS using power converters with an estimation error of less than 500 hours for about 20 years.